MX945GM

Intel® 945GM uFC-PGA 478 Core 2 Duo / Core Duo Core 2 Solo / Core Solo mobil CPU Mini ITX Main Board

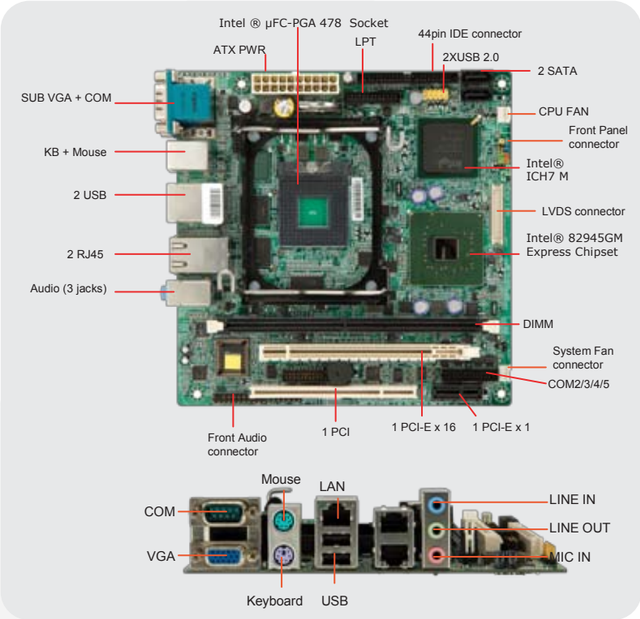

Features

- Supports Intel µFC-PGA 478 Core 2 Duo Core Duo / Core 2 Solo / Core Solo mobil CPU with 65nm process technology
- Intel 82945GM Express Chipset
- One DIMM up to 2GB DDR2 533/667 SDRAM
- Intel Graphics Media Accelerator 950
- Dual 18-bit LVDS
- Realtek ALC888 5.1 + 2 CH HD Audio, S/PDIF
- Dual Intel 82573L Gigabit LAN
- 1 PCI-E x 16, 1 PCI
- 5 COM, 2 SATA, 4 USB 2.0, 16-bit GPIO

Core 2 Duo | 945GM Chipset | PCIe x 16/PCIe x 1 | Dual Gbit LAN | 5 COM | Daul 18bit LVDS | GPIO

Block Diagram

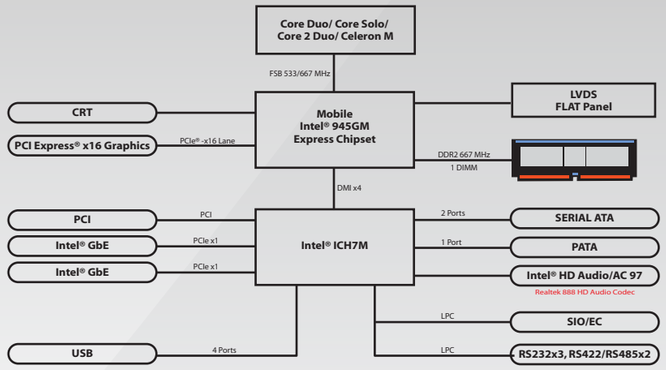

Ordering information

MX945GM

Intel Core 2 Duo / Core Duo / Core 2 Solo Core Solo Mini ITX Main Board with VGA, 7.1 CH Audio, Dual Gigabit LAN, PCI-E x16, PCI, & 4 USB 2.0

Packing List of MX945GM

80I-945GM-10000B2 MX945GM Mini-ITX Motherboard	x1
14GS0000017T07 SATA Cable 7P MALE*2W/LATCH 350mm	x2
14GS0000016V04 IDE Cable 44P/2.0-44P/2.0-40P/2.54 455mm	x1
14GS0000019V04 DUPONT 26P/2.0-DB 9P MALE*4 300mm	x1
13GS0700003A33 CPU Cooler (excluded)	x1

Specifications

System

CPU	Supports Intel uFC-PGA 478 Core 2 Duo Core Duo / Core 2 Solo / Core Solo mobil CPU with 65nm process technology
FSB	533/667 MHz
BIOS	Award 4 Mb Flash ROM BIOS
System Chipset	Intel 82945GM GMCH/82801GM ICH7-M
I/O Chip	Winbond W83627EHG
System Memory	One 240-pin DIMM socket supports up to 2 GB DDR2 533/667 SDRAM
Watchdog Timer	Reset: 1 sec.~255 min. and 1 sec. or 1 min./step
H/W Status Monitor	Monitoring CPU temperature, voltage, and cooling fan status. Auto throttling control when CPU overheats
Expansion	One PCI Express X16, One PCI slot (PCI Rev. 2.2 compliant)
S3	S3 Support
SmartFan Control	Yes

I/O

MIO	1 x EIDE (Ultra DMA 100), 1x LPT, 2 x SATA, 1 x RS-232 (D-sub), 2 x RS-232 & 2 x RS-422 RS-485 (through 26pin extension cable), 1 x K/B, 1 x Mouse
USB	4 x USB 2.0 ports
DIO	16-bit General Purpose I/O for DI and DO

Display

Chipset	Intel 82945GM GMCH integrated Graphics Media Accelerator 950
Display Memory	Intel DVMT 3.0 supports 224 MB video memory
Max. 3D Resolution	2048 x 1536 @ 32 bpp (85 Hz)
Dual Display	CRT + LVDS
LVDS	Intel 945GM supports Dual 18/24* Bit LVDS
DVI	Through ADD2 DVI Card
Secondary VGA	Through ADD2 VGA Card

Audio

Audio	Realtek ALC888 5.1 + 2 CH High Definition Audio Codec
Audio Interface	Mic in, Line in, Line out, S/PDIF

Ethernet

LAN 1	Intel 82573L Gigabit LAN
LAN 2	Intel 82573L Gigabit LAN

Back Panel I/O Port

1 x PS/2 Keyboard / 1 x PS/2 Mouse / 1 x RS-232 Serial Port
1 x VGA port / 2 x USB 2.0/1.1 / 2 x LAN RJ45 port
5.1 +2 CH Audio I/O (3 jacks)

Internal I/O Connector

* 1 x USB connectors support additional 2 USB ports
* 1 x 20-pin ATX Power connector
* 1 x IDE connector for two devices
* 1 x extension header supports 4 COM connectors
* 1 x Chassis intrusion connector
* 2 x SATA connectors
* 1 x Front panel audio connector
* 1 x Audio amplifier connector
* 1 x System panel connector
* 1 x LVDS connector
* 1 x CPU Fan connector
* 1 x System Fan connector
* 1 x Parallel port connector
* 1 x SPDIF Out connector
* 1 x Digital I/O header

Mechanical & Environmental

Power Type	ATX
Operating Temperature	0~50°C (32~122°F)
Operating Humidity	0%~90% relative humidity, non-condensing
Size (L x W)	6.69" x 6.69" (170 mm x 170 mm)
Weight	0.88 lbs (0.4 Kg)