MX852GM-C6

Intel® 852GM Celeron® M 600MHz Mini ITX Main Board

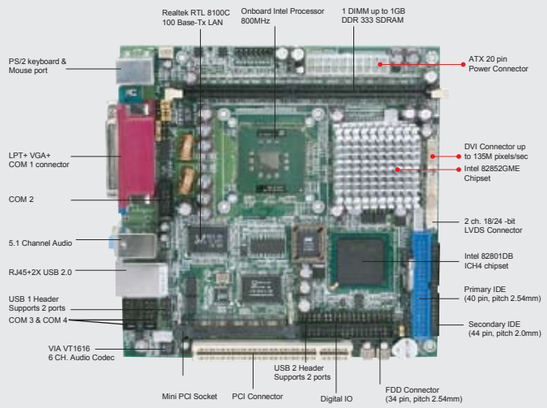

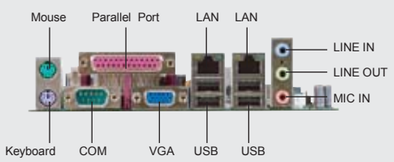

Features

- Onboard Intel Celerom M 600MHz w/512K 2nd Level Cache
- Intel 82852GM Chipset
- One DIMM up to 1 GB DDR 200/266 SDRAM
- Intel Extreme Graphics 2 Controller
- DVI, 2-CH LVDS, Dual View, Optional Built-in Touch Screen I/F
- VIA VT1616 5.1 ch. Audio, TV-out
- Realtek RTL8110S Gigabit LAN
- 1 PCI, 1 Mini PCI, Type I/II CF
- 4 COM, 6 USB 2.0, 16-bit GPIO

Dual View | TV-Out | LVDS | DVI | Optional T/S | Gigabit LAN | 4 COM | Mini PCI

Block Diagram

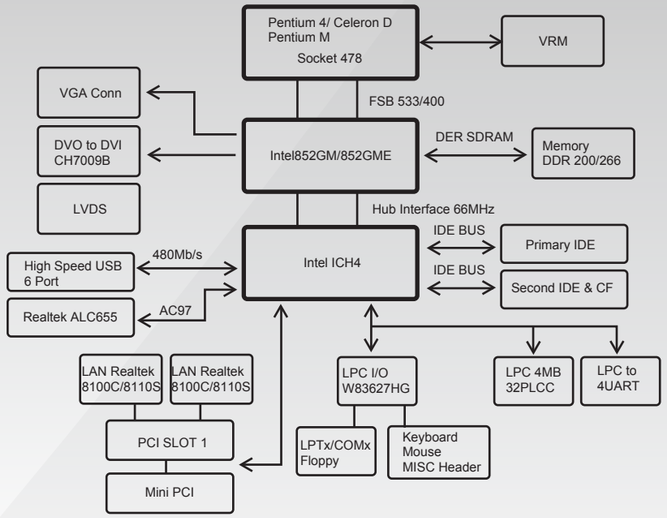

Ordering information

MX852GM-C6

Intel Celerom M 600 MHz Mini ITX Main Board with VGA, 2-CH LVDS, DVI, TV-out, 5.1 CH Audio, Gb LAN, CF, PCI, Mini PCI, 4 COM, 6 USB 2.0, & GPIO

Packing List of MX852GM-C6

80I-852GM-C6-10000B2 MX852GM-C6 Mini-ITX Motherboard	**x1**
14GS0000057V04 COM1 CABLE 2.0mm pitch	**x3**
14G000002900 44pin IDE cable	**x1**
14GS0000069V04 40pin IDE cable	**x1**
14G000802347 34pin FDD cable	**x1**
13GS020217000 I/O SHIELD	**x1**

Specifications

System

CPU	Onboard Intel Celerom M 600MHz w/512K L2 Cache
FSB	400 MHz
BIOS	Award 4 Mb KB Flash BIOS
System Chipset	Intel 82852GM GMCH / 82801DB ICH4
I/O Chip	Winbond W83627HF-AW
System Memory	One 184-pin DIMM socket supports up to 1 GB DDR 200/266 SDRAM
SSD	One CompactFlash Type I/II socket
Watchdog Timer	Reset: 1 sec.~255 min. and 1 sec. or 1 min./step
H/W Status Monitor	Monitoring CPU temperature, voltage, and cooling fan status. Auto throttling control when CPU overheats
Expansion	One PCI slot (PCI Rev. 2.2 compliant), One Mini PCI
S3	S3 Support

I/O

MIO	2 x EIDE (Ultra DMA 100), 1 x FDD, 1 x LPT, 3 x RS-232,1 x RS-232/422/485, 1 x K/B, 1 x Mouse
IrDA	115 kbps, IrDA 1.0 compliant
USB	6 x USB 2.0 ports
DIO	16-bit General Purpose I/O for DI and DO

Display

Chipset	Intel 82852GM GMCH integrated Extreme Graphics 2 controller
Display Memory	Intel DVMT 2.1 supports up to 64 MB video memory
Resolution	CRT mode: 1600 x 1200 @ 32 bpp (85 Hz) LCD/Simultaneous mode: 1600 x 1200 @ 32 bpp (85 Hz)
Dual Display	CRT + LVDS, or DVI/TV-out + LVDS or CRT + DVI
LVDS	Single channel 18/24-bit/Dual-channel 36-bit LVDS
DVI	Chrontel CH7009A DVI transmitter up to 135M pixels/second
TV-out	Chrontel CH7009A TV encoder supports both NTSC/PAL

Built-in Touch Screen (Optional)

Chipset	PenMount DMC9000
Touch Screen Interface	With 9-pin 2 mm box header (can be selected to support 4/5/8-wire touch screen)

Audio

Audio Codec	VIA VT1616 supports 5.1 CH AC97 Audio
Audio Interface	Mic in, Line in, CD Audio in, Line out

Ethernet

LAN 1	Realtek RTL8110S Gigabit LAN

Back Panel I/O Port

1 x PS/2 Keyboard / 1 x PS/2 Mouse / 1 x Parallel port
1 x Serial port / 1 x VGA port / 1 x RJ45 port
2 x USB 2.0/1.1 / 5.1 CH Audio I/O (3 jacks)

Internal I/O Connector

* 2 x USB connectors support additional 4 USB ports
* 1 x 20-pin ATX Power connector
* 1 x Floppy disk drive connector
* 1 x IDE connector for two devices
* 3 x COM connector
* 1 x CPU Fan connector
* 2 x Chassis Fan connector
* 1 x CD audio in connector
* 1 x DVI connector
* 1 x LVDS connector
* 1 x Inverter Power connector
* 1 x IR connector
* 1 x TV connector
* 1 x JMISC connector
* 1 x GPIO connector
* 1 x Front panel

Mechanical & Environmental

Power Type	ATX
Operating Temperature	0~60°C (32~140°F)
Operating Humidity	0%~90% relative humidity, non-condensing
Size (L x W)	6.69" x 6.69" (170 mm x 170 mm)
	0.88 lbs (0.4 Kg)