MX800LX

AMD® Geode LX800 Mini ITX Main Board

Startup Manual

Packing List

Before you begin installing your single board, please make sure that the following parts have been shipped.

- 1 x AMD LX800 Mini ITX Main board
- 1 x CD-ROM contains the followings:
  - User's Manual in PDF file
  - Drivers
- 3 x COM cable
- 1 x 2-In-1 FD/ATA cable
- 1 x Startup Manual

Disclaimer and Notice

The manufacturer reserves the right to make changes, without notice, to any product, including circuits and/or software described or contained in this manual in order to improve design and/or performance. The manufacturer assumes no responsibility or liability for the use of the described product(s), conveys no license or title under any patent, copyright, or masks work rights to these products, and makes no representations or warranties that these products are free from patent, copyright, or mask work right infringement, unless otherwise specified. For the detail product information, please refer to user's manual.

15GS0600045T26

Product Overview

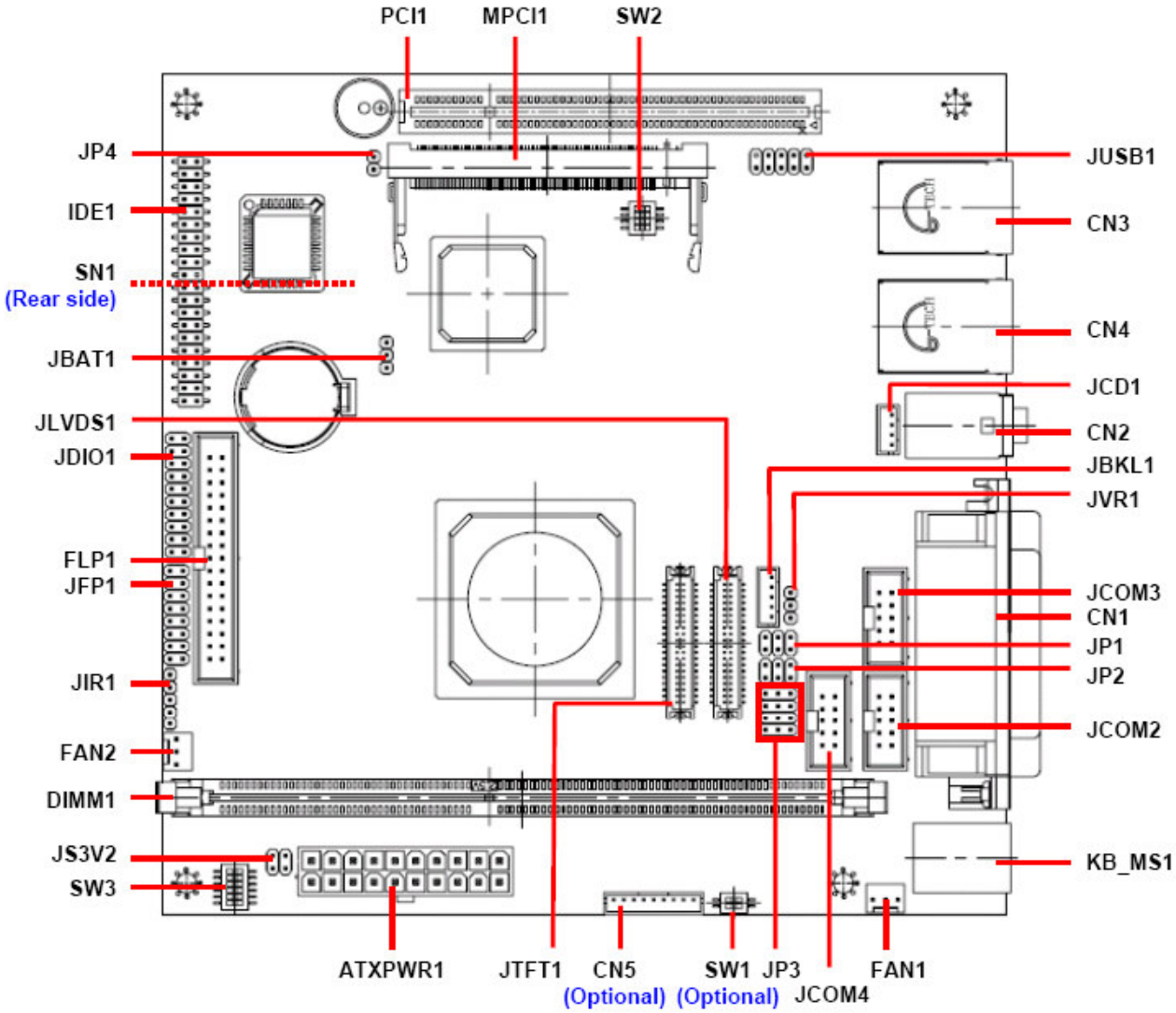

Specifications

System

CPU	Onboard AMD Geode LX800 @ 0.9 W with 128K L2 Cache or 64K L1 Cache
BIOS	Award 4 Mb Flash ROM BIOS
System Chipset	AMD Geode LX800/CS5536
I/O Chipset	Winbond W83627HG-AW
Memory	1 x 184-pin DIMM socket supports up to 1 GB DDR 400 SDRAM
SSD	1 x CompactFlash Type I/II socket
Watchdog Timer	Reset: 1 sec.~255 min. and 1 sec. or 1 min./step
H/W Status Monitor	Monitoring CPU temperature, voltage, and cooling fan status. Auto throttling control when CPU overheats
Expansion Slots	1 x PCI slot (PCI Rev.2.2 compliant), 1 x Mini PCI
S3	S3 Support

I/O	
MIO	1 x EIDE (Ultra DMA 66), 1 x FDD, 1 x LPT, 3 x RS-232, 1 x RS-232/422/485, 1 x K/B, 1 x Mouse, 1 x COM with power
IrDA	115k bps, IrDA 1.0 compliant
USB	4 x USB 2.0 ports
DIO	16-bit General Purpose I/O for 4 DI and 4 DO
Display	
Chipset	AMD Geode LX800 with integrated graphics engine
Display Memory	AMD LX800 integrated graphics controller supports up to 32 MB video memory
Resolution	CRT mode: 1920 x 1440 @ 32 bpp (85 Hz) TFT mode: 1600 x 1200 @ 32 bpp (100Hz)
Onboard LVDS	AMD Geode LX800 supports Single channel 24-bit LVDS
Built-in Touch Screen (Optional)	
Chipset	PenMount DMC9000
Touch Screen Interface	With 9-pin 2mm box header (can be selected to support 4/5/8-wire touch screen)
Audio	
AC97 Codec	Realtek ALC203 supports 2 CH AC97 Audio
Audio Interface	Mic in, Line in, CD audio in, Line out
Ethernet	
LAN1	Realtek RTL8100C LAN
LAN2	Realtek RTL8100C LAN

Jumpers

Label	Function	Note
JBAT1	**Clear CMOS**	**Normal *** **Clear CMOS**
JP1, JP3	**COM1 RS-232/422/485 Select**	**JP1** **JP3** **RS-232 (Default)** + 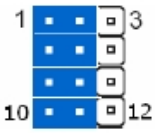 **RS-422** + 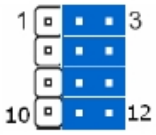 **RS-485** + 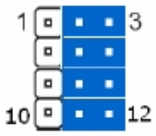

Jumpers

Label	Function	Note
JP2	COM1 Pin 9 Signal Select	Ring* +5V +12V
JP4	CF Master/Slave Mode Select	Master Slave *
JS3V2	ATX Power Used	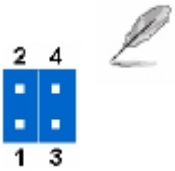 Note: JS3V2 is set for ATX power used, please do not remove the jumpers of 1-2, 3-4 while using.
SW3	CPU/Memory Frequency Select	LX800 (CPU @ 500MHz) 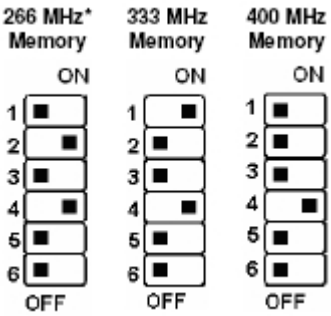

Connectors

Label	Function	Note
JBKL1	LCD Inverter Connector	
JFP1	Front Panel Connector	
JVR1	LCD Backlight Brightness Adjustment Connector	

JBKL1

Signal	PIN
+12V	1
GND	2
ENBKL	3
VR	4
+5V	5

JFP1

Signal	PIN	PIN	Signal
RESET	1	2	SYS_LED+
GND	3	4	SYS_LED-
HDD_LED+	5	6	PWR_LED+
HDD_LED-	7	8	PWR_LED-
GND	9	10	SUS_LED+
PWR_BUT	11	12	SUS_LED-
SUS_BUT	13	14	SPK+
GND	15	16	SPK-

JVR1

Signal	PIN
+5V	1
VR	2
GND	3