BV945G

Intel® 945G LGA775 Core™ 2 Duo® / Core™ Duo® / Pentium® 4 / Celeron® D ATX Main Board

Startup Manual

Packing List

Before you begin installing your single board, please make sure that the following parts have been shipped.

- 1 x Intel 945G ATX Main board
- 1 x CD-ROM contains the followings:
  - User's Manual in PDF file
  - Drivers
- 1 x 2-in-1 FD/ATA cable
- 3 x COM1 cable (9-pin, 260mm)
- 2 x SATA cable
- 1 x Startup Manual

Disclaimer and Notice

The manufacturer reserves the right to make changes, without notice, to any product, including circuits and/or software described or contained in this manual in order to improve design and/or performance. The manufacturer assumes no responsibility or liability for the use of the described product(s), conveys no license or title under any patent, copyright, or masks work rights to these products, and makes no representations or warranties that these products are free from patent, copyright, or mask work right infringement, unless otherwise specified. For the detail product information, please refer to user's manual.

15GS0600021T26

Product Overview

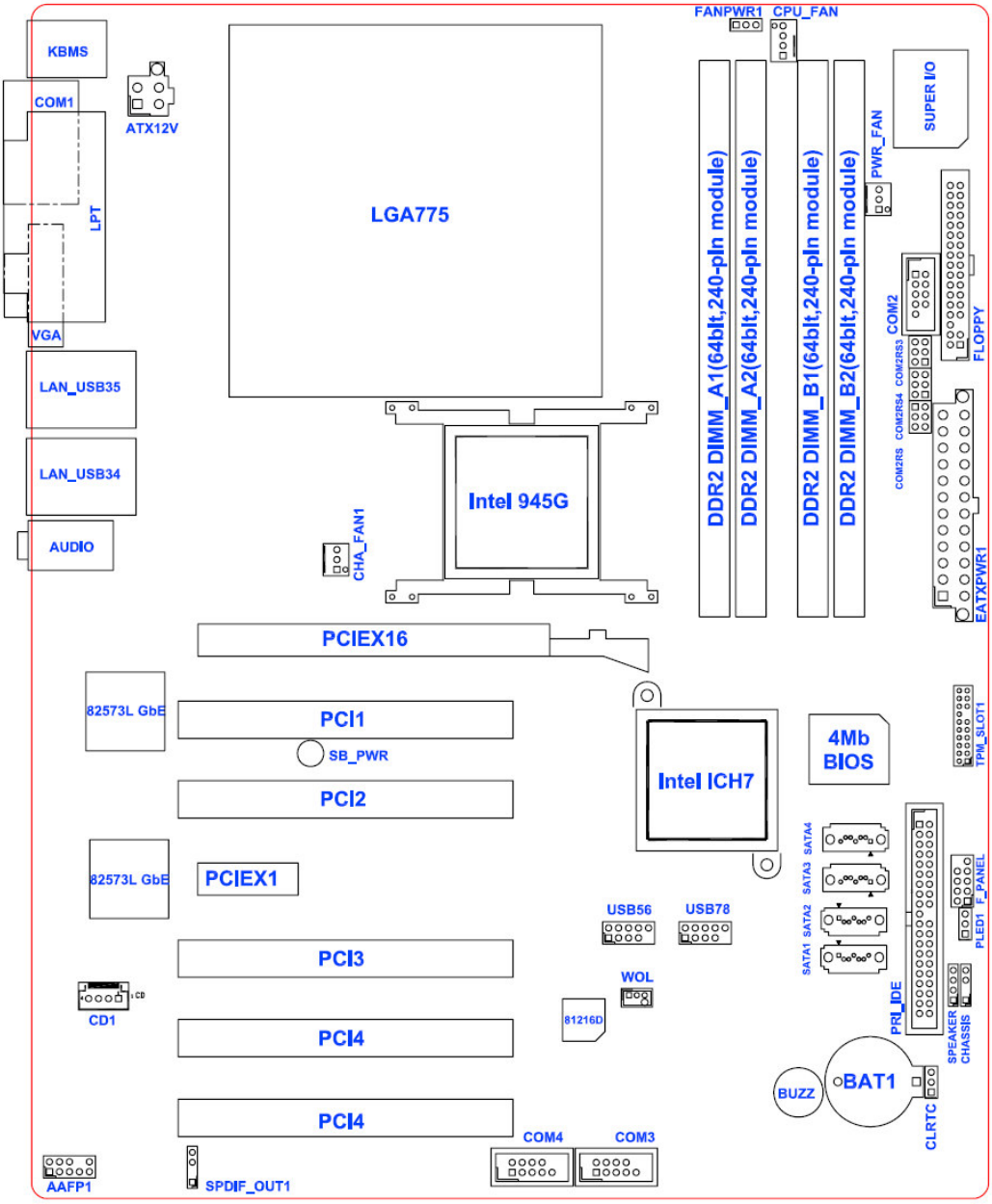

Specifications

System

CPU	Supports Intel LGA775 Core 2 Duo / Core Duo / Pentium 4 / Celeron D CPU with 65nm process technology
FSB	1066/800/533 MHz
BIOS	Award 4 Mb Flash ROM BIOS
System Chipset	Intel 82945G GMCH/ICH7
I/O Chipset	Winbond W83627EHG-A
Memory	Four 240-pin DIMM sockets support up to 4 GB Dual Channel DDR2 533/667 SDRAM
Watchdog Timer	Reset: 1 sec.~255 min. and 1 sec. or 1 min./step
H/W Status Monitor	Monitoring CPU temperature, voltage, and cooling fan status. Auto throttling control when CPU overheats

System	
Expansion Slots	One PCI Express X16, One PCI Express X1, Five PCI slots (PCI Rev. 2.2 compliant)
S3	S3 Support
Smart Fan Control	Yes
I/O	
MIO	1 x EIDE (Ultra DMA 100), 4 x SATA, 1 x FDD, 1 x LPT, 3 x RS-232, 1 x RS-232/422/485, 1 x K/B, 1 x Mouse
USB	8 x USB 2.0 ports
Display	
Chipset	Intel® 82945G GMCH integrated Graphics Media Accelerator 950
Display Memory	Intel® DVMT 3.0 supports 224 MB video memory
Resolution	2048 x 1536 @ 32 bpp (75 Hz)
External VGA Interface	PCI-E X16 VGA interface
LVDS	Through ADD2 LVDS Card
DVI	Through ADD2 DVI Card
Secondary VGA	Through ADD2 VGA Card
Audio	
AC97 Codec	Realtek ALC888 supports 7.1-CH High definition audio codec
Audio Interface	Mic. in, Line in, CD Audio in, Line out
Ethernet	
LAN1 / LAN2	Intel 82573L Gigabit LAN

Jumpers

Label	Function	Note	
CLRTC	Clear CMOS	Normal *	Clear CMOS

Connectors

Label	Function	Note
AAFP	Front Panel Audio Connector	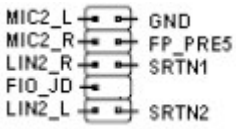
CHASSIS	Chassis Intrusion Connector	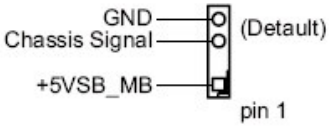

Connectors

Label	Function	Note
COM2RS, COM2RS3, COM2RS4	COM2 Ports	

	RS232	RS422	RS485
COM2RS3	1-3 2-4	3-5 4-6	3-5 4-6
COM2RS4	1-3 2-4	3-5 4-6	3-5 4-6
COM2RS	5-6	3-4	1-2

CPU_FAN, PWR_FAN, CHA_FAN	CPU/Power/Chassis Fan Connectors	

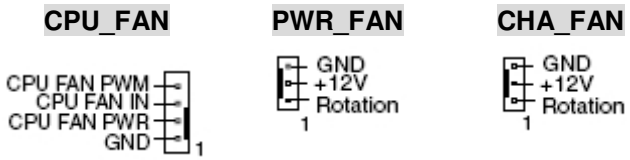

F_PANEL	System Panel Connector	

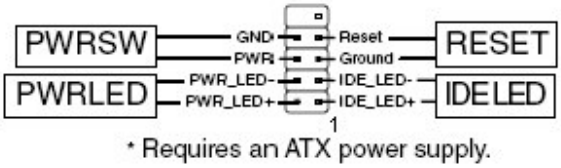

PLED	Power LED Connector	

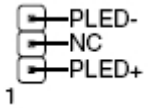

SPEAKER	Speaker Connector	

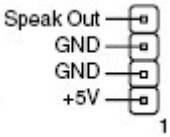

SPDIF_OUT	Digital Audio Connector	

TPM_SLOT1	TPM Slot	

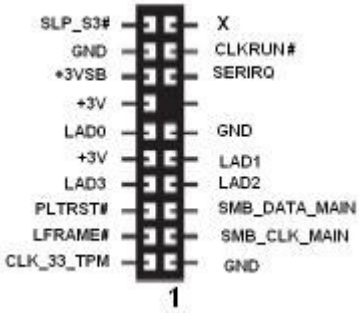
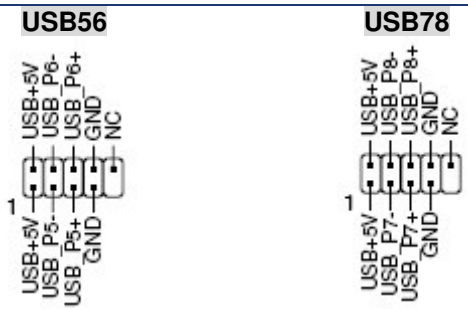
USB56, USB78	USB Connectors